A High-Payload Wall-Climbing Robot Using Passive Bistable Suction Cups
Appendix A

Andrew Nguyen, Mingyuan Li, Daniel Bruder, *Member, IEEE*

February 25, 2026

1 Design Parameters and Testing

The geometry of the suction cup is defined by four primary variables. Through iterative testing, it was determined that the concavity ratio—defined as the relationship between the interior height and the interior diameter—is the critical factor in achieving bistable behavior. Figure 1 shows the parameter within the cup.

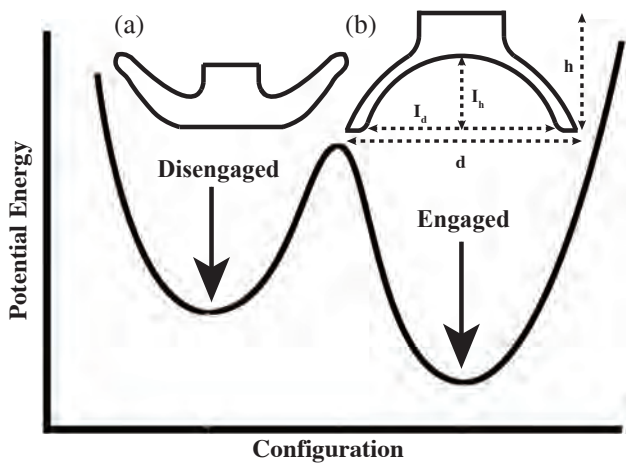

Figure 1: Bistable suction cup design requires work to be done on the system to change configurations. (a) Disengaged position where cup is "inverted". (b) Engaged position where cup is in the standard position. The force required to flip from disengaged to engaged is greater than in the other direction.

Parameter	Symbol	Description
Height	h	Total vertical distance from the base to the top
Diameter	d	The outside diameter of the cup
Interior Height	I_h	The height of the inside opening of the cup
Interior Diameter	I_d	The diameter of the inside opening of the cup
Wall Thickness	t	The thickness of the silicone material

Table 1: Explanation of the bistable suction cup's design parameters

2 Materials and Tooling

To ensure a high-quality vacuum seal, a hybrid manufacturing approach was utilized for the mold, leveraging the strengths of different 3D printing technologies. The parts of the mold are seen in Figure 3. The top mold was printed using an FDM printer with PLA; specifically, we used a Bambu Lab X1 Carbon. The bottom mold was printed using an SLA printer with Clear v3 resin; specifically, we used a Formlabs 3.

Item	Qty
Top Mold (PLA)	1
Bottom Mold (SLA)	1
Pin (PLA)	1
Attachment Piece (PLA)	1
M3x0.5 30mm Socket Head Screw	8
M3x0.5 Hex Nuts	8
Smooth-Sil™ 945 Part A	22 (g)
Smooth-Sil™ 945 Part B	22 (g)

Table 2: Bill of Materials

3 Manufacturing Process

The following steps outline the standardized casting process:

1. Mold Preparation: Align the top and bottom pieces. Secure the assembly firmly using clamping screws to prevent material leakage at the seam.
2. Insert Placement: Position the alignment pin and the specific attachment piece into the top of the mold. This creates the necessary negative space for the robot's mounting hardware.
3. Mixing: Combine Part A and Part B of the Smooth-Sil™ 945 in a 1:1 ratio by weight (approximately 22g of each part). Mix thoroughly to ensure a homogeneous cure. We followed the steps in the instruction video on Smooth-On's website. Figure 2 shows screenshots from the guide to create the silicone.

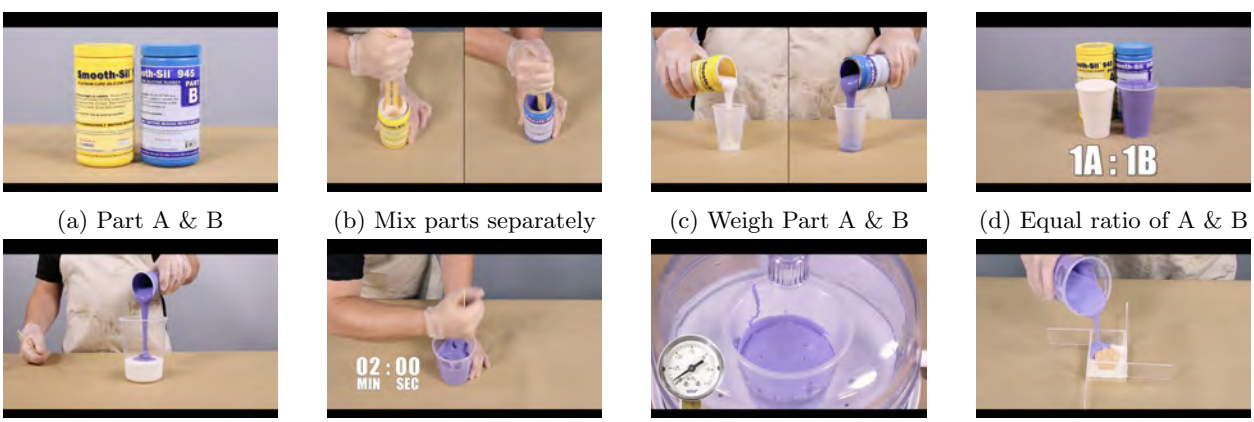

(a) Part A & B (b) Mix parts separately (c) Weigh Part A & B (d) Equal ratio of A & B

(e) Add the parts (f) Mix thoroughly (g) Vacuum degassing (h) Pour into the mold

Figure 2: Assortment of screenshots from Smooth-On's mixing guide

4. Pouring: Slowly pour the mixture into the top of the mold, allowing gravity to displace air as the silicone fills the internal crevices.
5. Degassing: Place the filled mold into a vacuum chamber for 10 minutes. This step is vital to remove entrapped air bubbles that could compromise the structural integrity or bistability of the cup.

6. Curing: Allow the mold to sit undisturbed on a level bench top for 24 hours at room temperature.
7. Demolding: Carefully remove the screws and separate the mold halves to extract the finished suction cup.

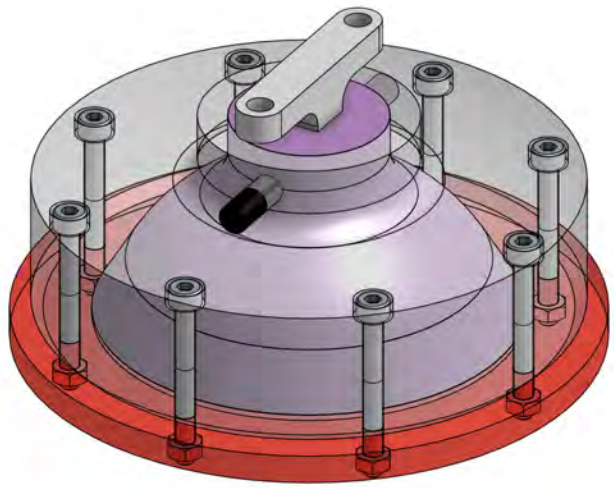

(a) Full Mold with Suction Cup

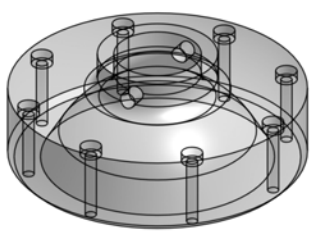

(b) Top Mold

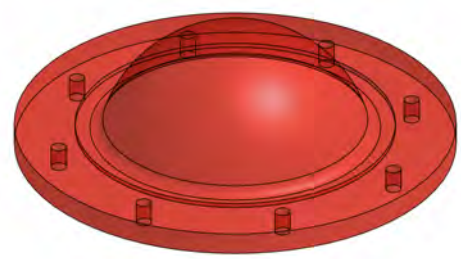

(c) Bottom Mold

(d) Pin

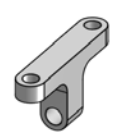

(e) Attachment Piece

Figure 3: Complete assembly components for the mold system.

4 Resources

- **Suction Cup CAD:** Onshape Document
- **Wall-Climbing Robot CAD:** Onshape Document